EasyDuino Raspberry RP2040

USB-C/Voltage regulator 5V -> 3.3V

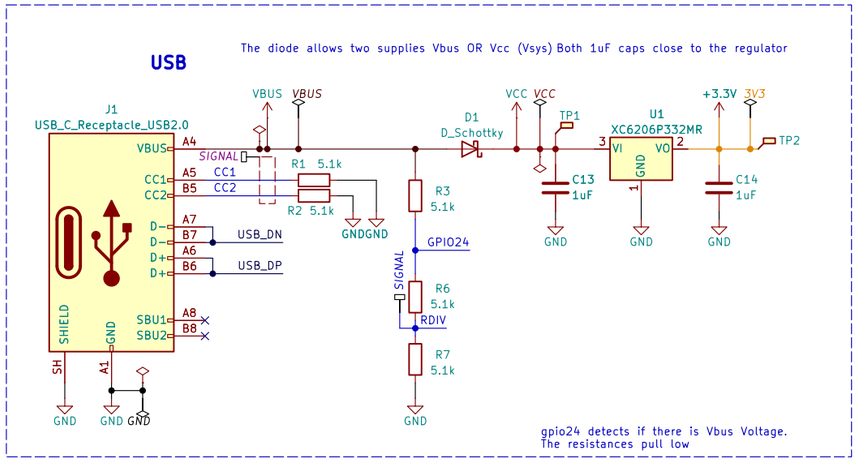

RP2040

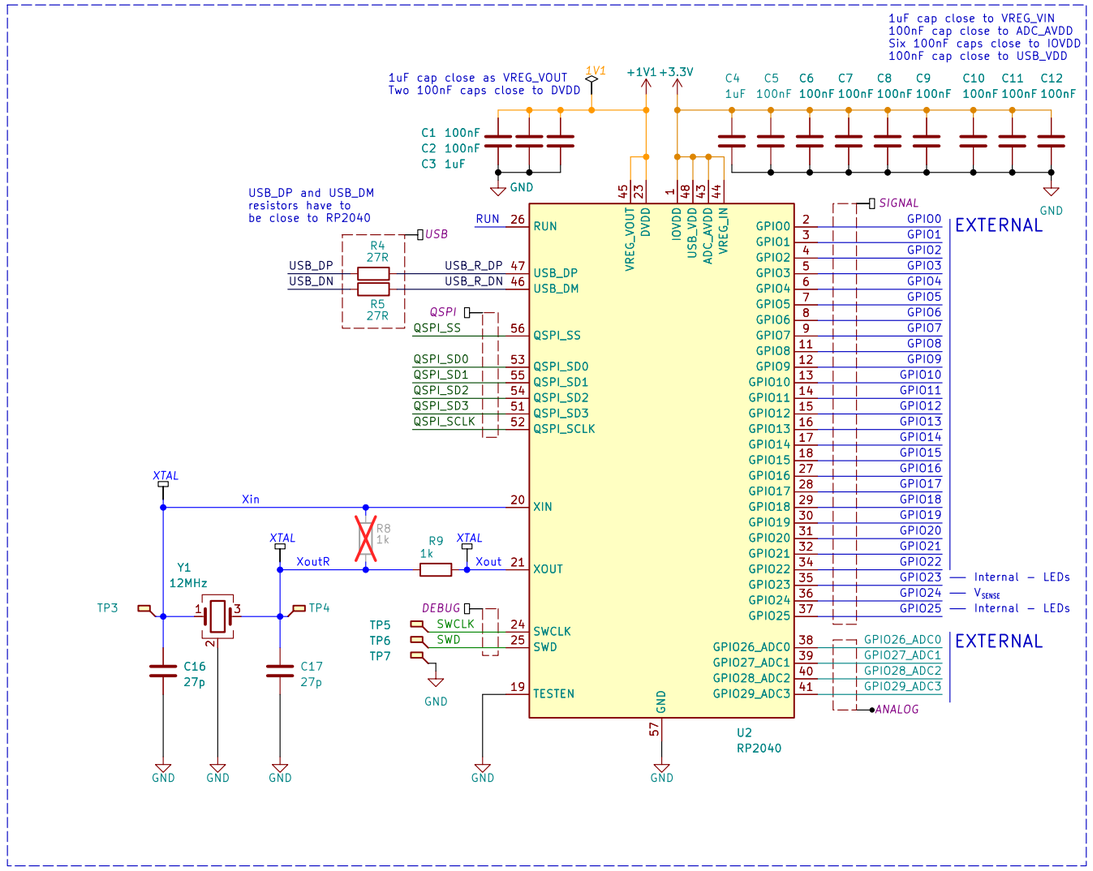

Flash Storage

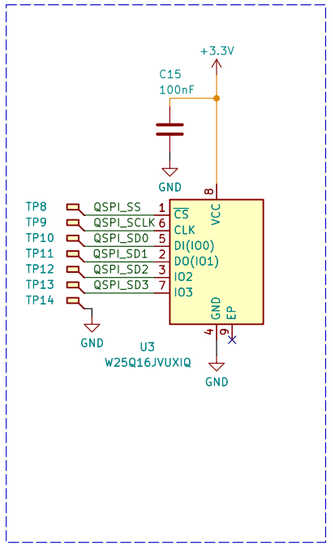

Connections

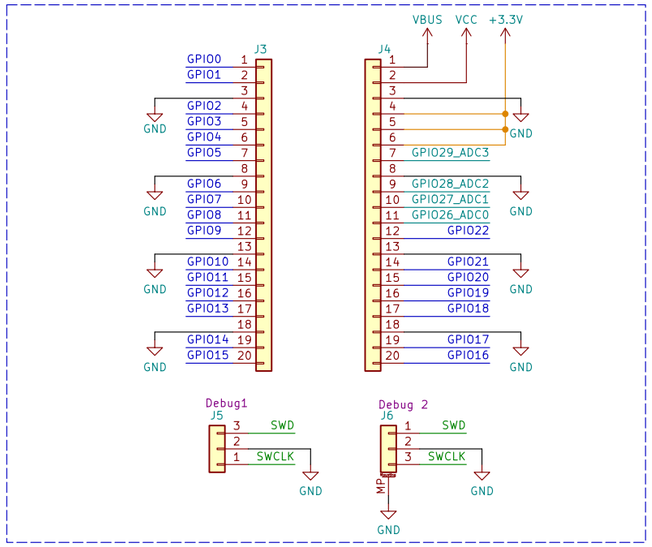

Push buttons

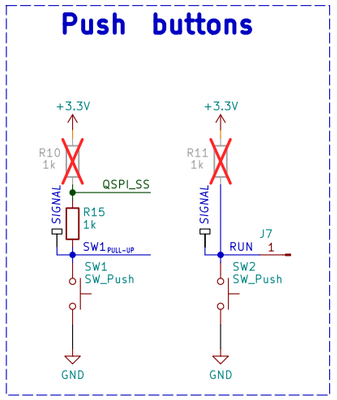

Power and user LEDs

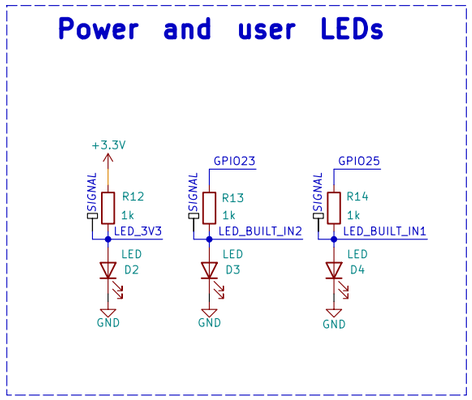

H1 MountingHole
H2 MountingHole
H3 MountingHole
H4 MountingHole

References

File: References.kicad_sch

Sheet: /
File: Easyduino_RP2040.kicad_sch

Title:

Size: A3	Date:	Rev:
KiCad E.D.A. 10.0.0		Id: 1/2

Specs:

Input Voltage: 5.5V–9V(External Source 5V) or 5V (USB). ONLY USE ONE VOLTAGE INPUT AT A TIME
Maximum Output Current at 5V input : 200 mA at 3.3V output
No Polarity Protection (External Source)
Overcurrent Protection: None

References:

RP2040

RPI Pico Schematic
Hardware design with rp2040 p10 –> 12MHz crystal with 27 pF Capacitors
rp2040 datasheet p13 –> USB_DP and USB_DM need 27 Ohm Resistors
rp2040 datasheet p13 –> Use a 12MHz Crystal
rp2040 datasheet p13 –> TESTEN to GND
rp2040 datasheet p155 –> USB_VDD connected to 3.3V and decoupled with a 100 nF capacitor
rp2040 datasheet p155 –> IOVDD connected to 3.3V and decoupled with a 100 nF capacitor per pin (6pins)
rp2040 datasheet p155 –> DVDD connected to VREG_VOUT = 1.1V and decoupled with a 100 nF capacitor per pin (2pins)
rp2040 datasheet p156 –> ADC_AVDD connected to 3.3V and decoupled with a 100 nF capacitor. A better circuit (Pico Schematic) can be made when ADC is crucial
rp2040 datasheet p160 –> VREG_VIN Internal 1.1V Voltage regulator Input. Connect to external 3.3V and decouple with 1uF
rp2040 datasheet p160 –> VREG_VOUT Internal 1.1V Voltage regulator Output. Connect to 1.1V and decouple with 1uF

USB C

Differential pair:

USB needs 90 Ohm differential traces.
According to JLCPCB impedance calculator, with a JLC7628 prepreg and 6mil (0.15mm) space between lines
I have to use 9 mil tracks –> 0.2mm. With a ground layer below
I have to place vias because of the pinout of USB C. Some other people have placed vias without problems for signal integrity

W25Q16JVUXIQ

W25Q16JVUXIQ Datasheet p6 –> Use a 100nF and 1uF capacitor
RPI Pico Schematic –> Use a 100nF and 2uF decoupling capacitors. A pull up resistor is not fitted
Hardware design with rp2040 p9 –> Use a 100nF decoupling capacitor. Pull up resistor is not fitted, the flash can work without it.
I will only place the 100nF capacitor, since the devboard can work according to Hardware design guide. I will not place a pull up resitor

XC6206P332MR–3.3V

XC6206_Torex Datasheet p6 –> Two 1 uF ceramic capacitors on Vin and Vout

Differences with Original Raspberry Pi Pico

GPIO23 is not exposed or used. Since the voltage regulator used (XC6206...) doesn't have a Power Select mode
GPIO29_ADC which is used for monitoring VSys (external battery) is not exposed or used in order to save costs
In the Raspberry Pi Pico Schematic, 2uF capacitors are used for decoupling. I use 1uF decoupling capacitors as indicated in the rp2040 datasheet
ADC_AVDD is powered only by 3.3V, no option for external Analog powering. This will be more noisy for projects where ADC is used.
ADC_AVDD But in order to save space and cost. I will skip the option to power it externally